Constellation
X-Ray Mission

6 S/C L2 Configuration Deployed On-orbit

Oren Sheinman
FST Meeting
September 24, 1998

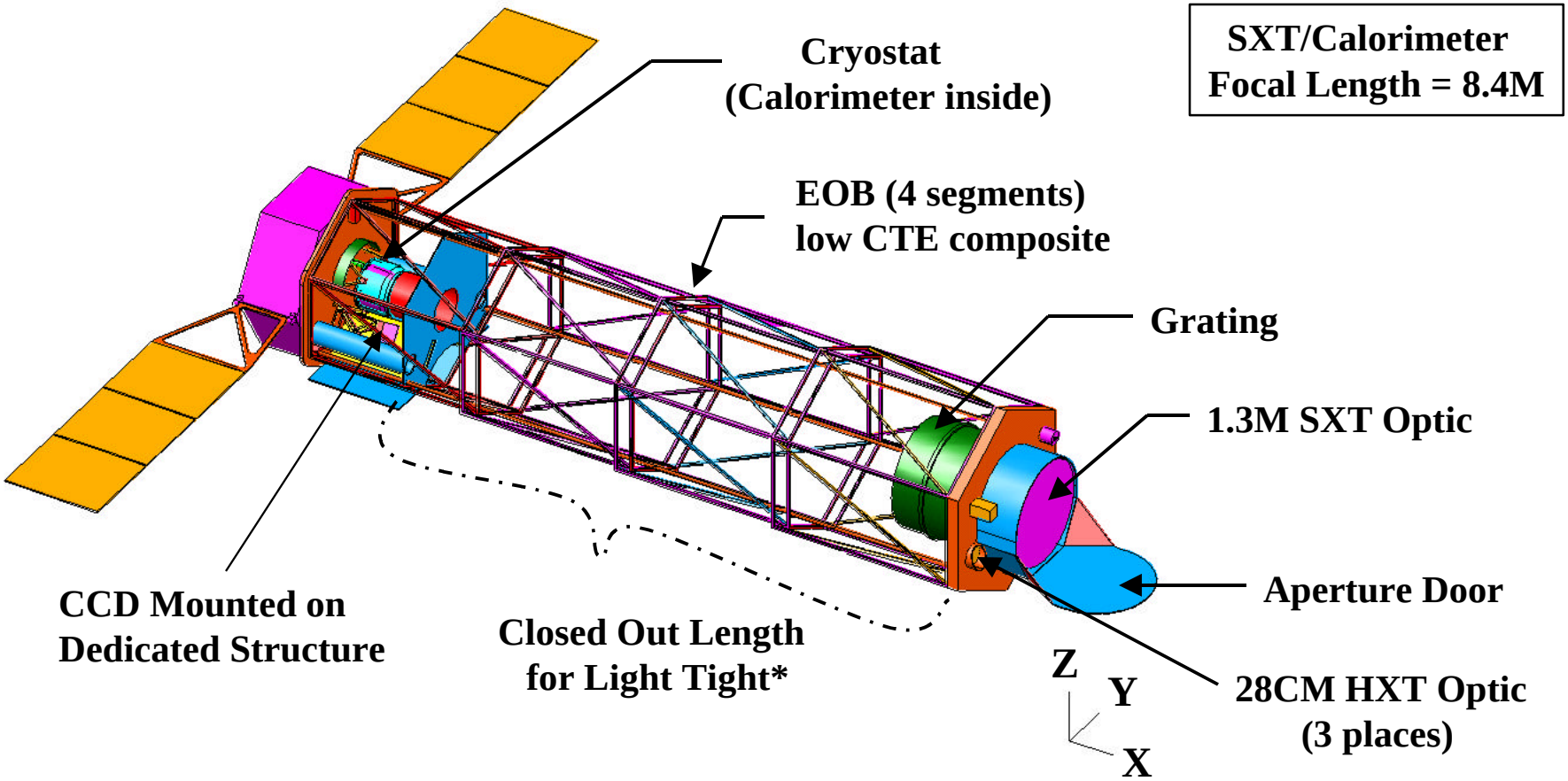

***Note: MLI blanket removed for clarity**

6 S/C L2 Configuration Stowed in Delta II 7925H-10L

Oren Sheinman
FST Meeting
September 24, 1998

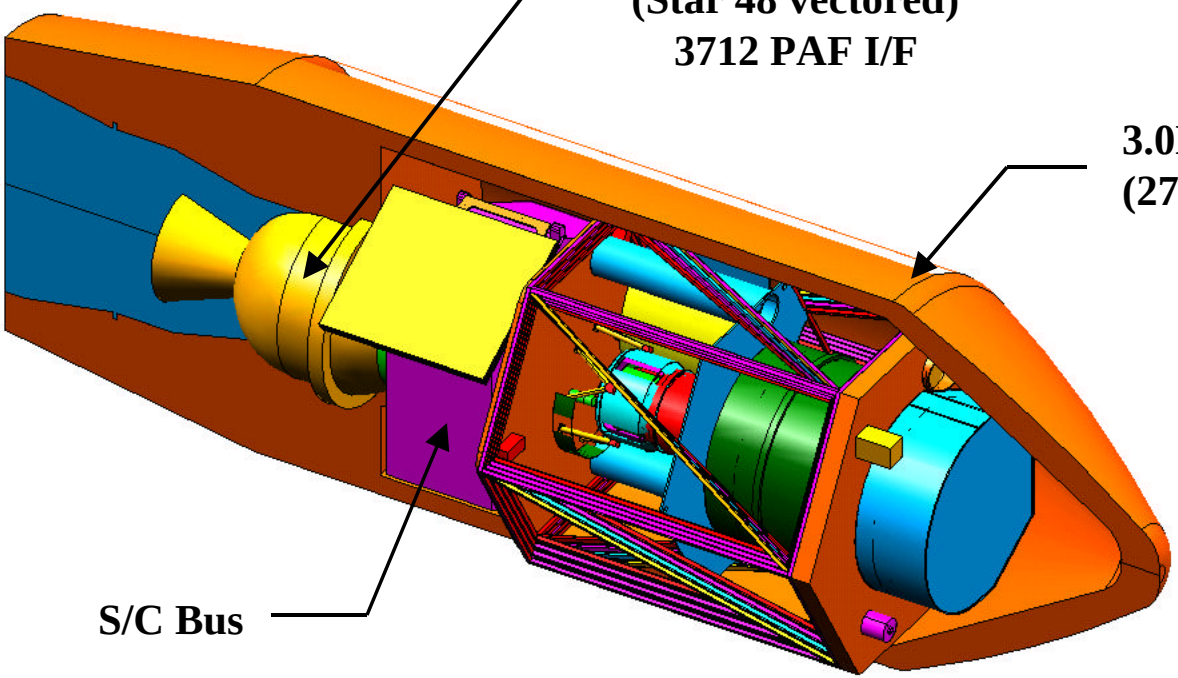

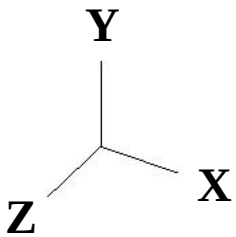

Note: MLI blanket removed for clarity

3 S/C L2 Configuration Deployed On-orbit

Oren Sheinman
FST Meeting
September 24, 1998

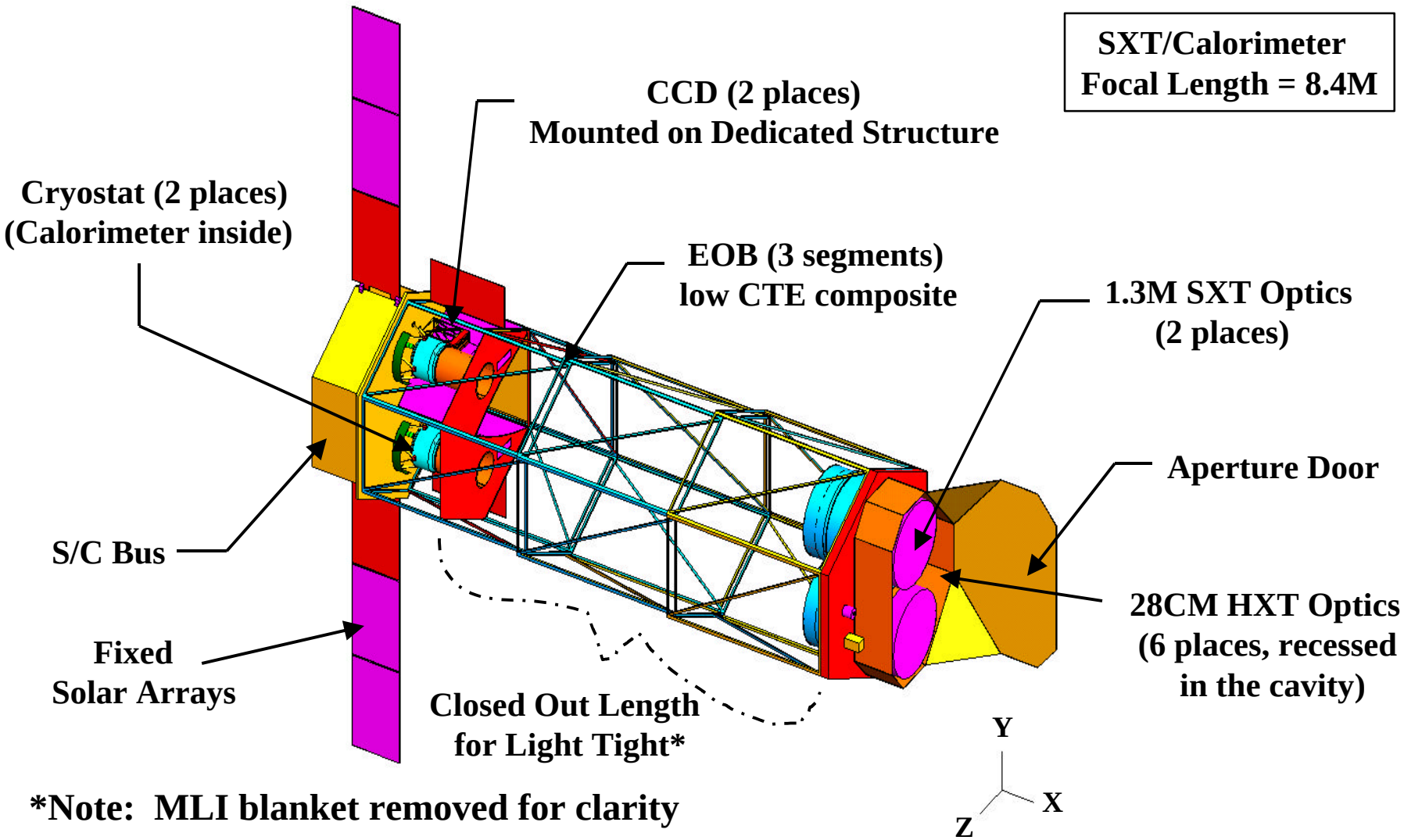

*Note: MLI blanket removed for clarity

3 S/C L2 Configuration Stowed in Delta III/Atlas IIAR

Oren Sheinman
FST Meeting
September 24, 1998

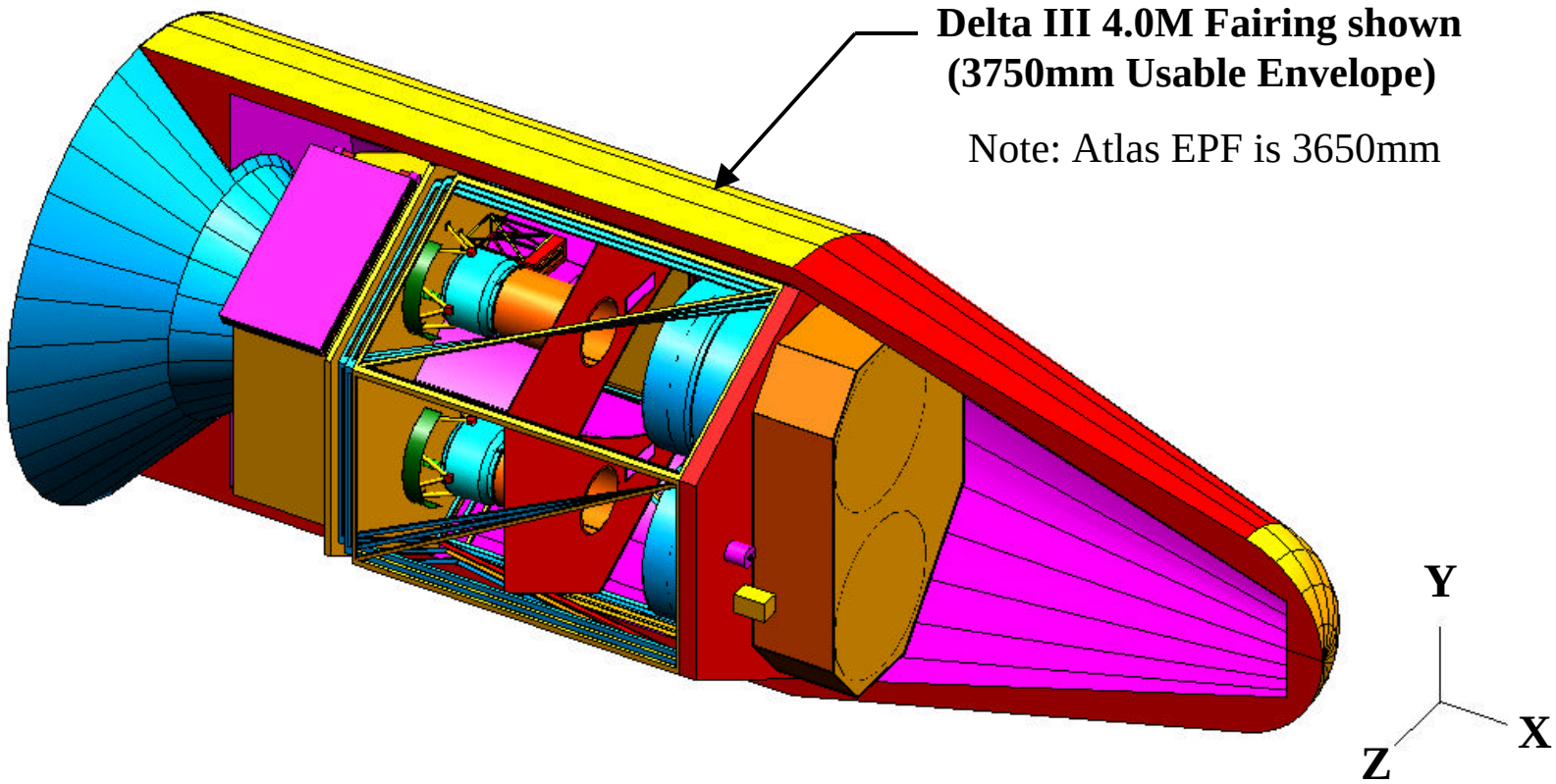

Note: MLI blanket removed for clarity