Payload Study Activities on the International X-ray Observatory

D. Martin, N. Rando, P. Verhoeve, Tim Oosterbroek, G. Saavedra, M. Bavdaz, P. Gondoin

European Space Agency,

Noordwijk, The Netherlands

Outline

1. **Instrument studies**
2. **IXO model payload & proposed instrument studies**
3. **P/L Accommodation in the industrial system studies**
4. **Instrument Resource requirements**

Instrument studies

Instrument Assessment Studies

- **Instrument studies parallel to industrial phase 0/A (assessment) studies**
- **Study Schedule (following call for DOI Q2/2009):**
  - **Kick off in Aug 2009**
  - **Reviews in Dec 2009 and March 2010**
  - **Instrument Preliminary Requirements Review and Technology Readiness Review (July 2010)**
- **Financed through member states**
- **Purpose:**
  - **advance the instrument definitions to the same level as S/C**
  - **Identify and reduce development risks**
  - **Prepare for Announcement of Opportunity (>Q2/2011)**

Study outputs

Study outputs (July 2010):

- **Instrument baseline design**
- **Consolidated interface requirements**
- **Trade-off(s) report**
- **Instrument development plan**
- **Instrument programmatic and cost estimates**
- **Instrument technology assessment report (TRL justification)**
- **Instrument technology development plan (TRL 5 required before mission implementation phase).**

To be included in IXO assessment study documentation package for review and down selection end 2010 beginning 2011

Model Payload

IXO Science Requirements

Mirror Effective Area	3 m^2 @1.25 keV 0.65 m^2 @ 6 keV with a goal of 1 m^2 150 cm^2 @ 30 keV with a goal of 350 cm^2	Black hole evolution, large scale structure, cosmic feedback, cosmic acceleration, strong gravity
Spectral Resolution (FWHM)	ΔE = 2.5 eV within 2' x 2' (0.3 – 7 keV) ΔE = 10 eV within 5' x 5' (0.3 - 7 keV) ΔE =150 eV at 6 keV within 18' Ø (0.1 - 15 keV) E/ΔE = 3000 (0.3–1 keV) with an area of 1,000 cm^2 and a goal of 3000 cm^2 for point sources ΔE = 1 keV within 8' x 8' (10 – 40 keV)	Large scale structure Missing ba[illegible] of background AGN
Angular Resolution	≤5" HPD (0.1 – 7 keV) 30" HPD (7 - 40 keV); goal of 5"	Large scale structure, cosmic feedback, black hole
Count Rate	1 Crab with >90% throughput. ΔE < 150 eV @ 6 keV (0.1 – 15 keV)	Str[illegible]
Polarimetry	1% MDP on 1 mCrab,100 ksec, 3σ, 2 - 6 keV	AGN geometry, strong gravity
Astrometry	1 arcsec at 3σ confidence	Black hole evolution
Absolute Timing	100 μsec	Neutron star studies

Microcalorimeter Arrays

Wide Field Imager

Gratings

High energy Imager

High Time Resolution Spectrometer

Polarimeter

IXO Model Payload

6 instruments: → **8 Assessment Studies in response to call for DOI**

- **X-ray Grating Spectrometer** → **CAT XGS – MIT* (US)**; **OP XGS – OU* (UK)**
- **X-ray Microcalorimeter** → **XMS – SRON* (NL)**; **MIS XMS – CEA* (F)**
- **Wide-Field Imager** → **WFI – MPI* (G)**
- **Hard-X-ray Imager** → **HXI – ISAS/JAXA* (J)**
- **High-Time Resolution Spectrometer** → **HTRS – CESR* (F)**
- **X-ray Polarimeter** → **XPOL – INFN* (I)**

*** Study lead institute**

CAT-XGS Key Technology

- **Effective area ≥ 1000 cm^2 (0.3 keV < E < 1.0 keV)**
- **Spectral resolution R = $\lambda/\Delta\lambda$ ≥ 3000**

- **Critical-angle transmission (CAT) gratings:**
  - high efficiency, low mass, relaxed alignment and figure tolerances, polarization insensitivity
  - Blazing eliminates need for camera on both sides of focus.
  - Gratings highly transparent at higher E.
- **CCD Camera:** detection + order sorting

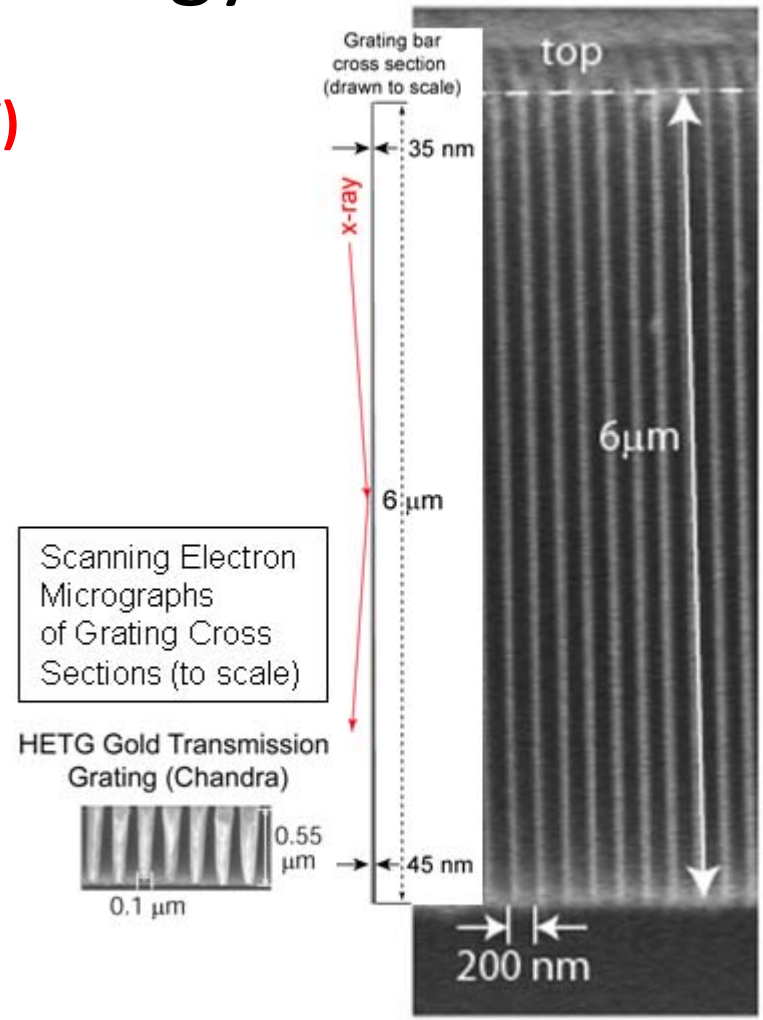

CAT-XGS Instrument configuration

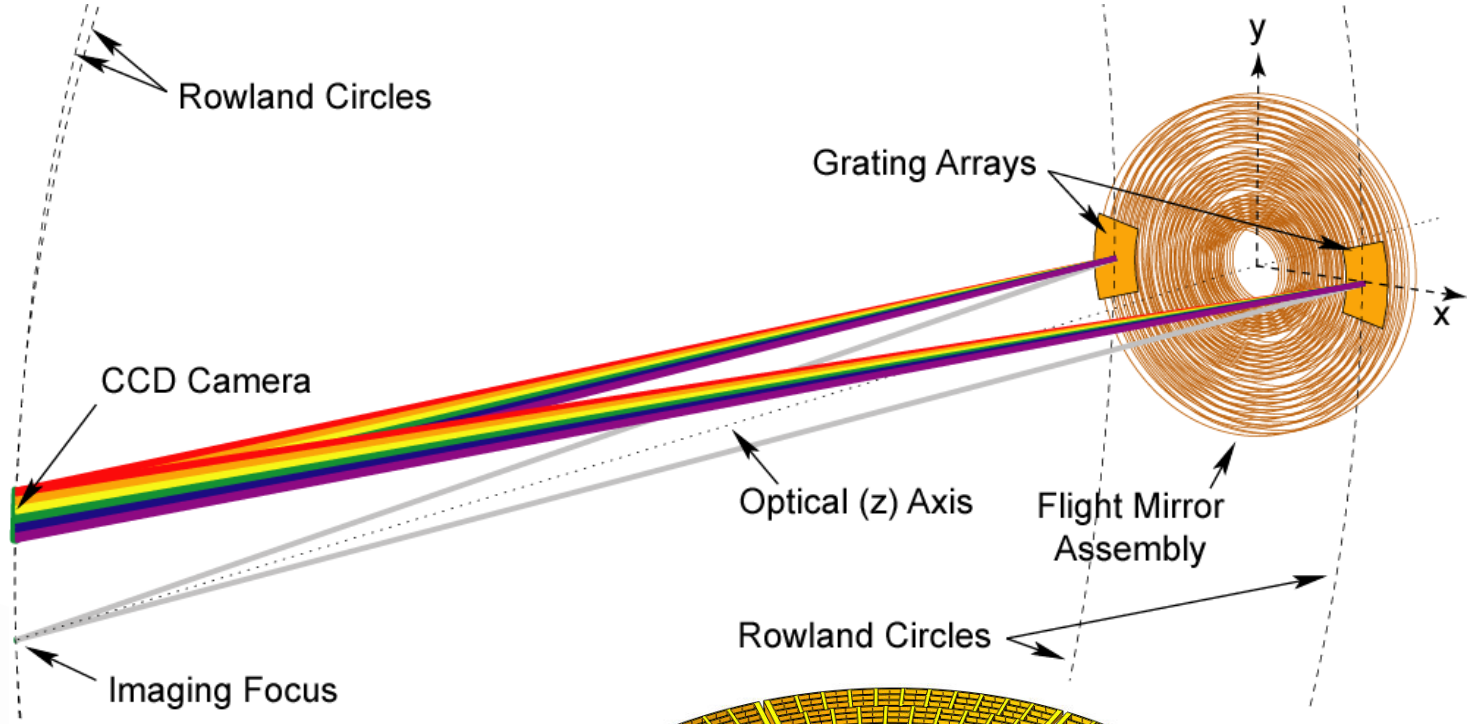

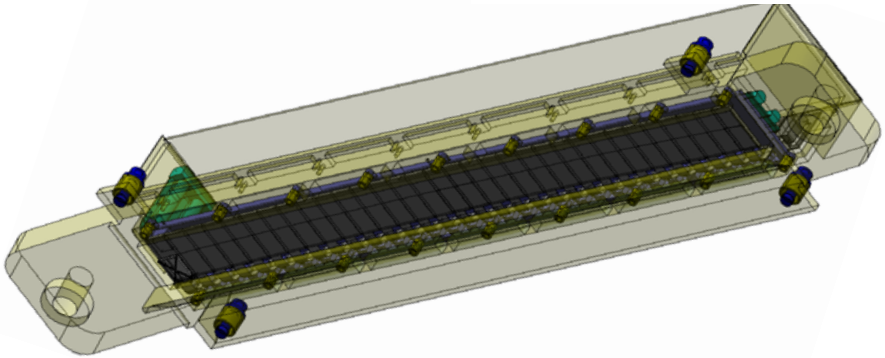

Camera with linear 32 CCD array

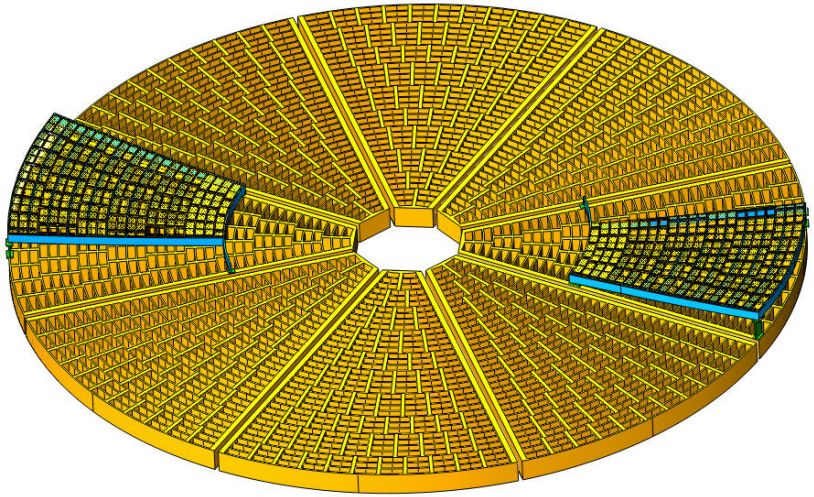

CAT grating arrays behind SPO mirrors

OP-XGS Technology

- **Off-Plane Gratings**
- **4 grating assemblies project 4 separate spectra →**
  - **relaxed alignment**
  - **Inherent redundancy against CCD loss**
  - **No loss across CCD gaps**
  - **Zero order monitoring possible**
- **CCD and camera technology based on XMM RGS and EPIC heritage**

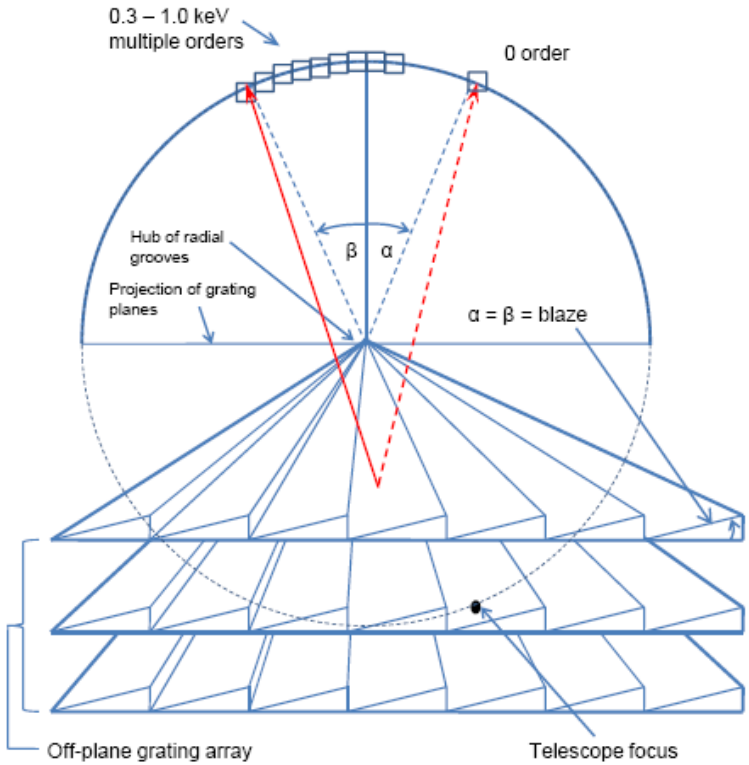

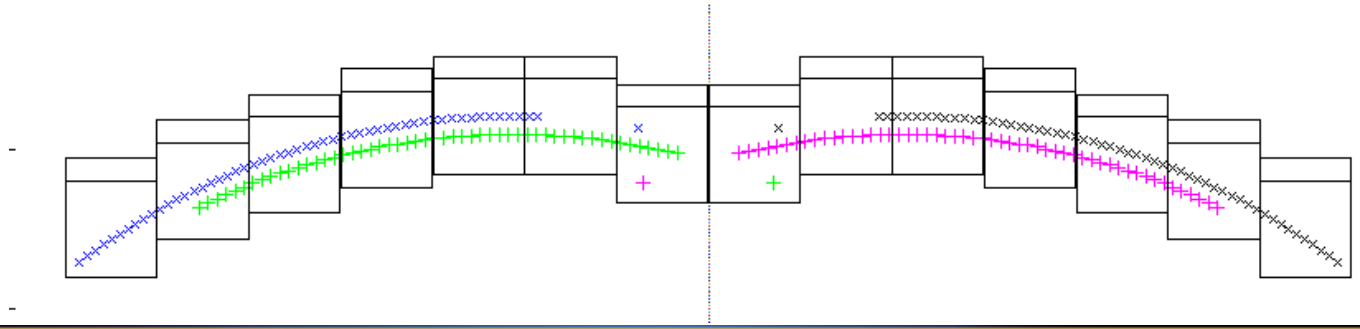

OP-XGS Instrument configuration

- **Gratings: 4 identical modules held in position on a 5.16m tower**

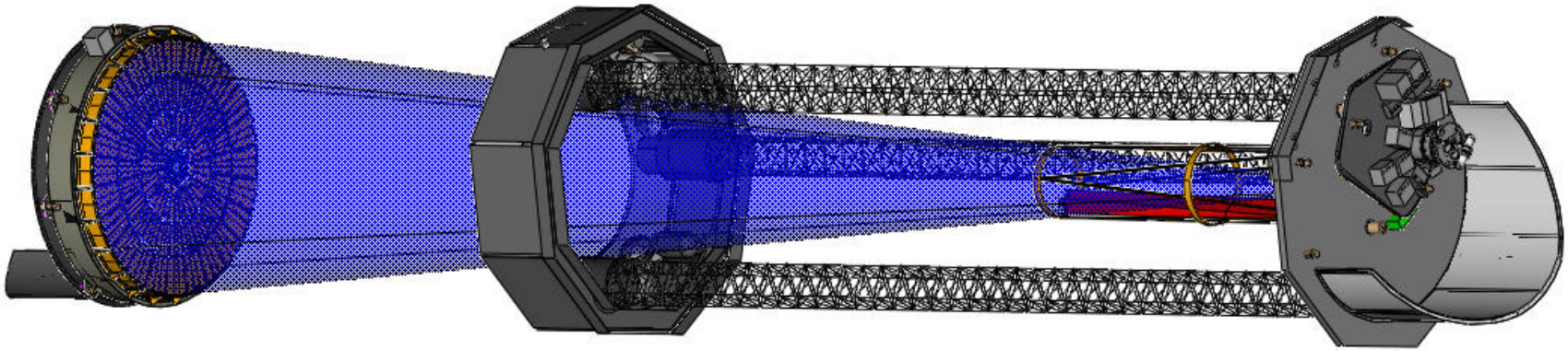

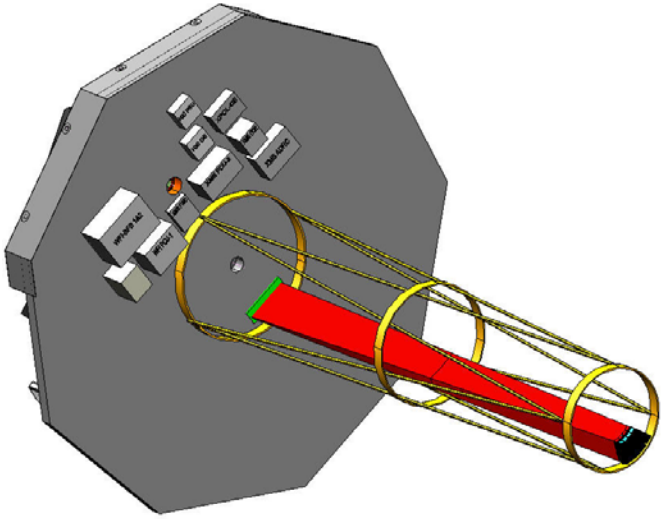

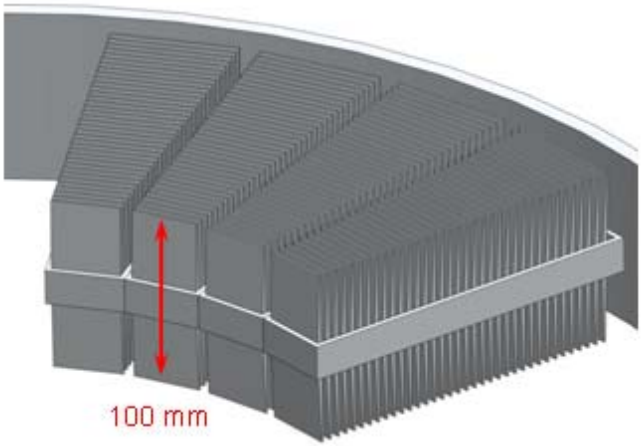

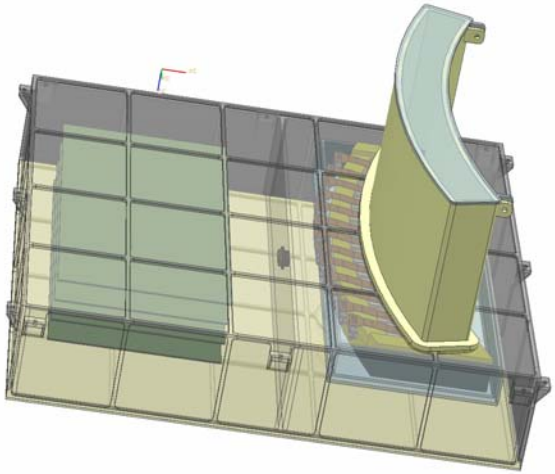

XMS Key Technology

E= 0.3-12 keV
ΔE= 2.5 eV (2'x2') & 10 eV (5'x5')

- **Micro-calorimeters (~2000):**
  - Transition Edge Sensors (~100mK)
- **multiplexed SQUID read-out (32:1)**
  - TDM, FDM, CDM
- **cryo-cooling to 45mK (10 years)**

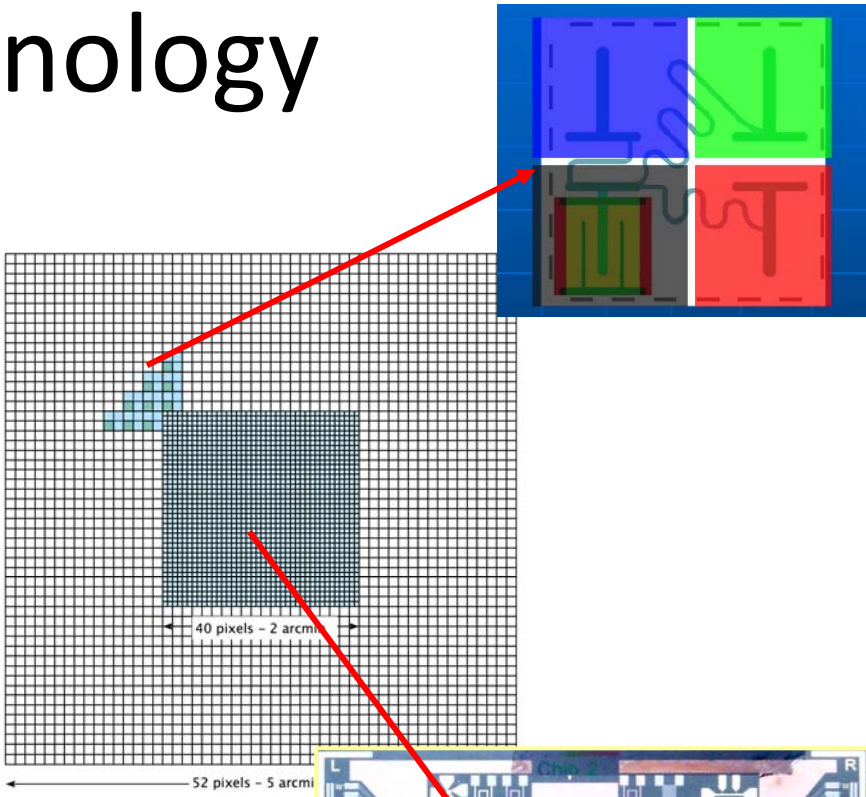

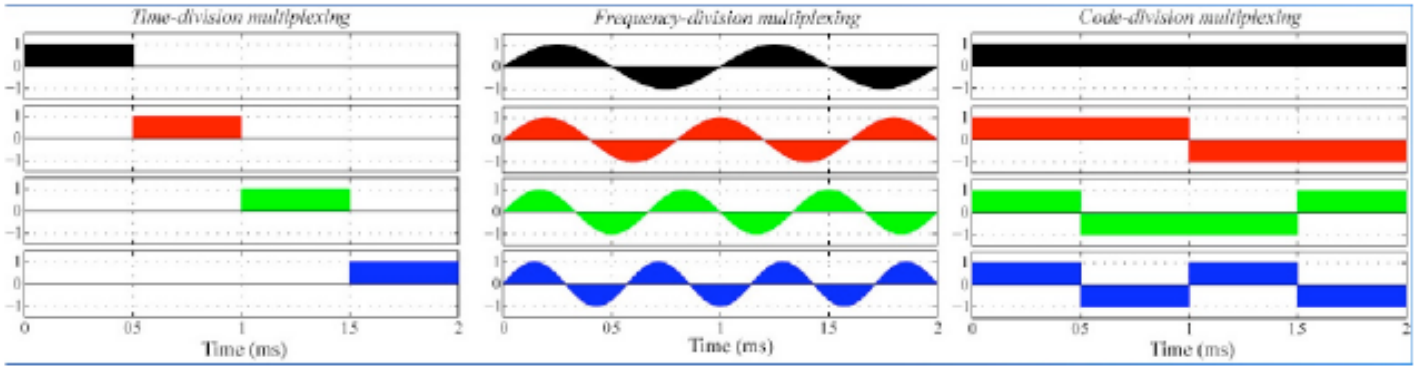

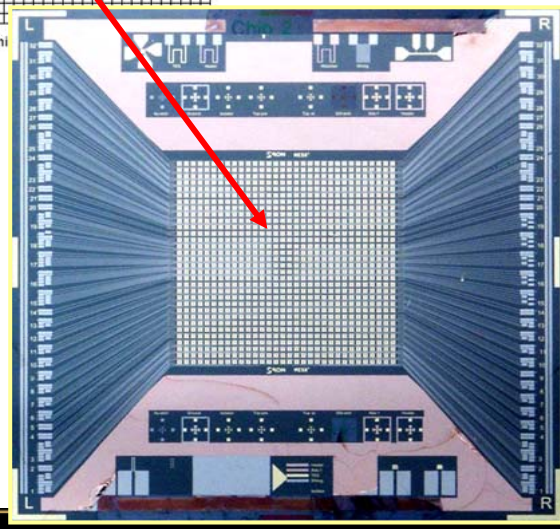

XMS Instrument Configuration

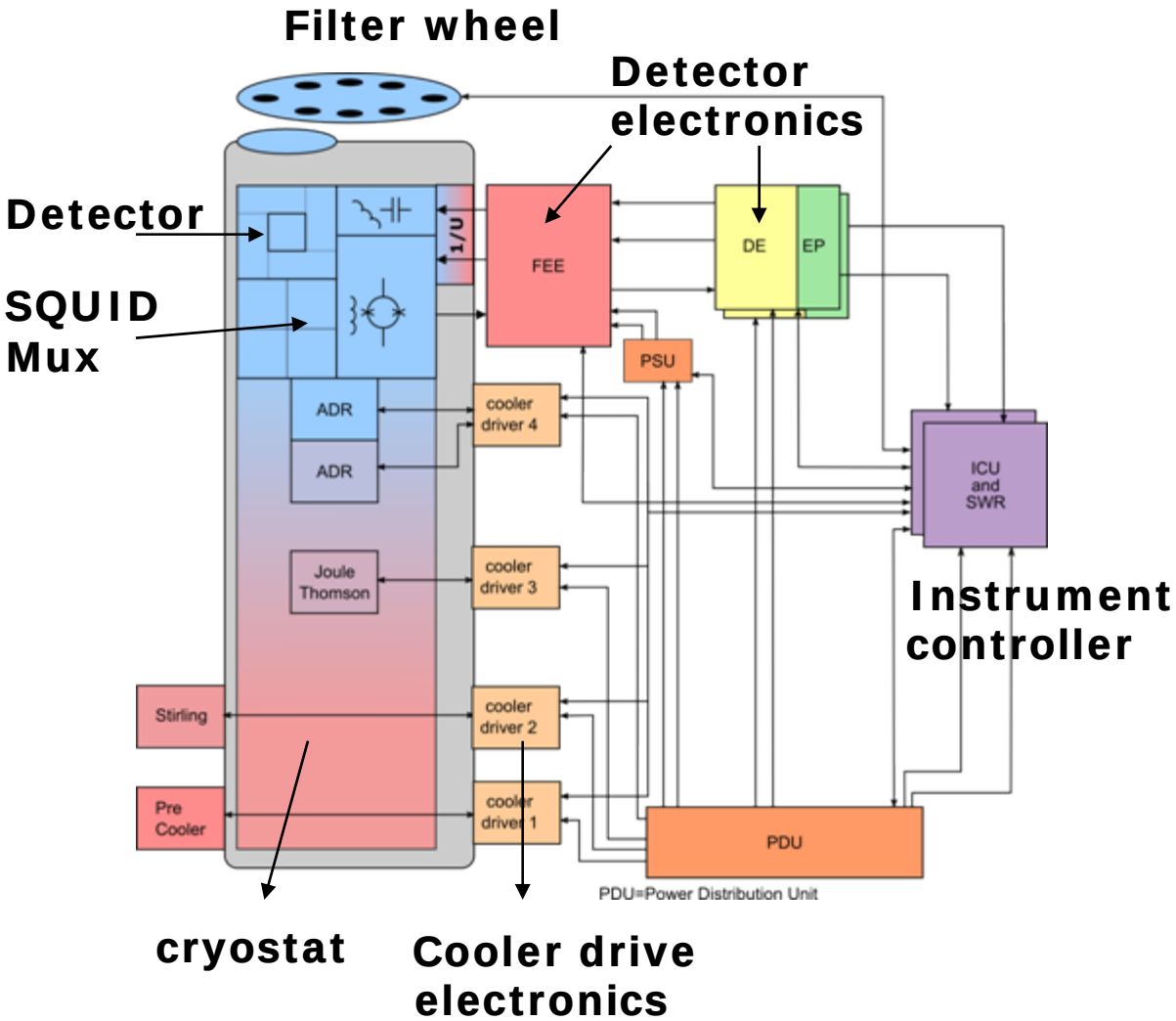

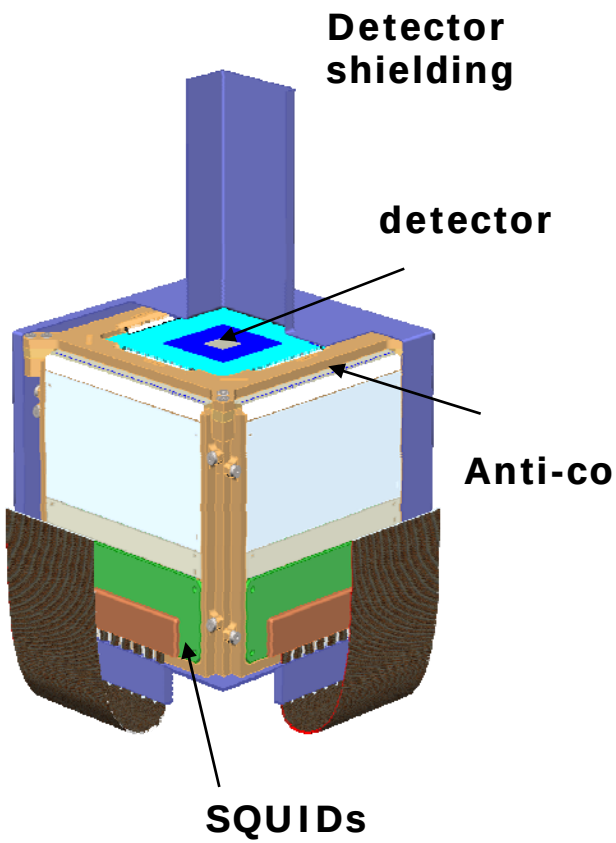

XMS – MIS Key Technology

7732-59 Fri AM

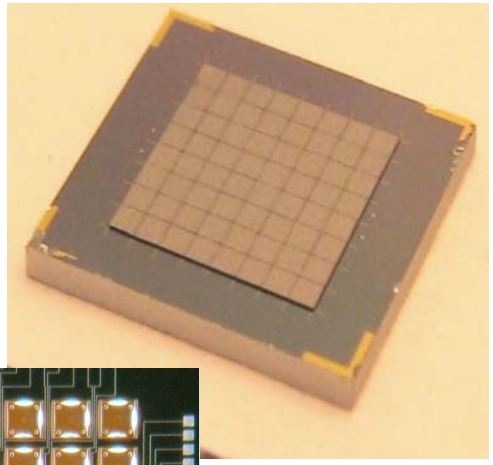

Metal – Insulator- Semiconductor microcalorimeters:

- Ta absorbers + implanted Si sensors
- 64x64 pixels with Pixel Size = 500µm
- ΔE~2.5 eV (TBC) over 6'x6' FoV
- Suzaku XRS and Herschel PACS heritage

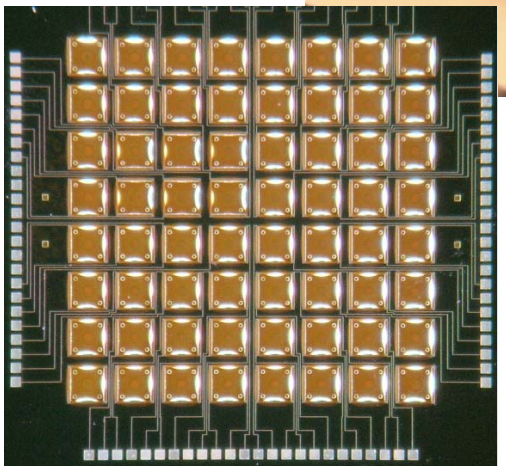

Proximity electronics (2.5/4K):

- HEMT
- SiGe ASICs
- 32:1 MUX

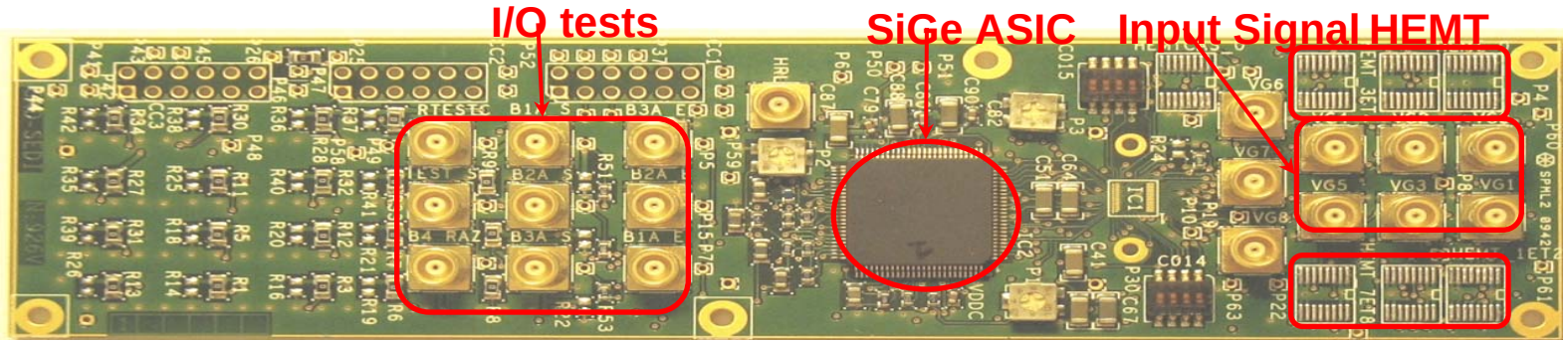

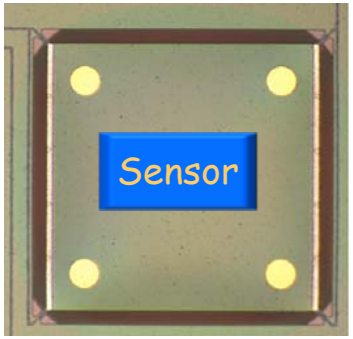

XMS – MIS Instrument Configuration

Focal Plan Assembly :

Volume~ 200x200x160 mm³

Mass ~4.4kg

P < 0.9 μW @50mK

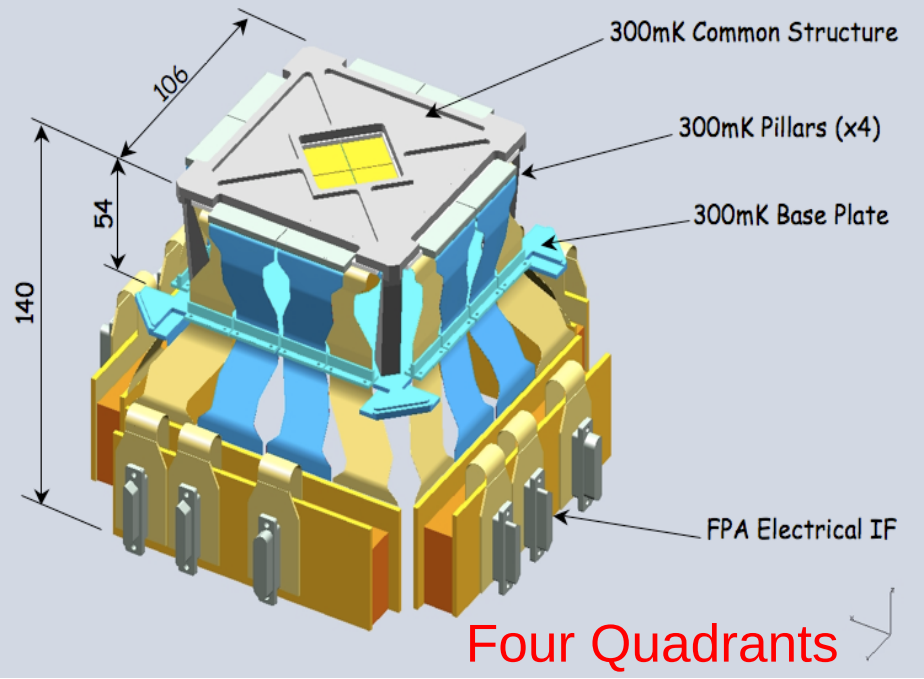

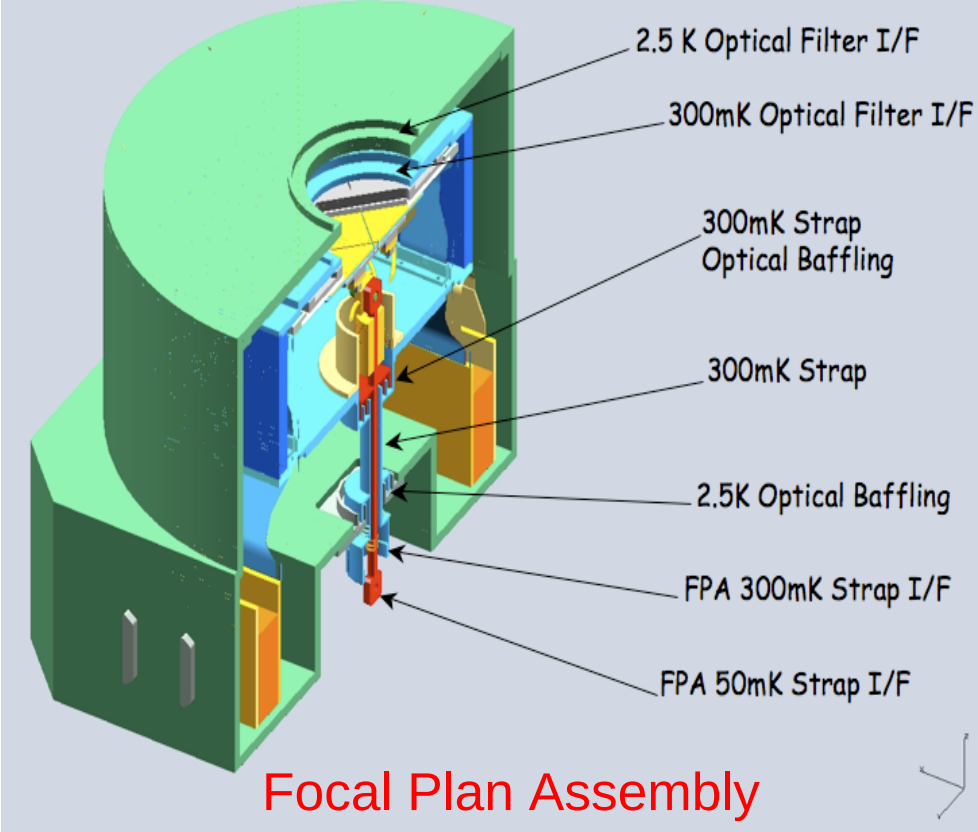

WFI Key technology

- E=0.3-15 keV
- FoV =18'

Active Pixel Sensor Array using DePFET Pixels

- 450µm fully depleted Si
- Monolithic wafer-scale integration on a 6" wafer
- Pixel size 100x100 µm^2
- Array: 1024 x 1024 pixels

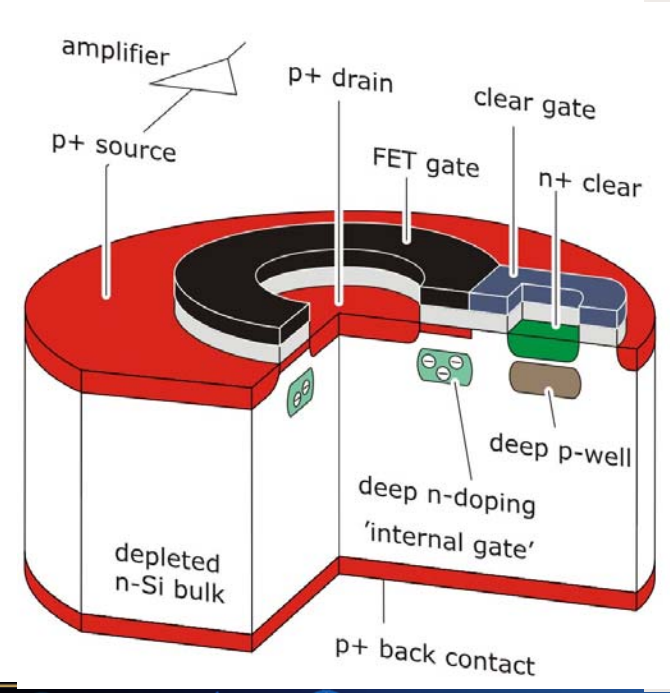

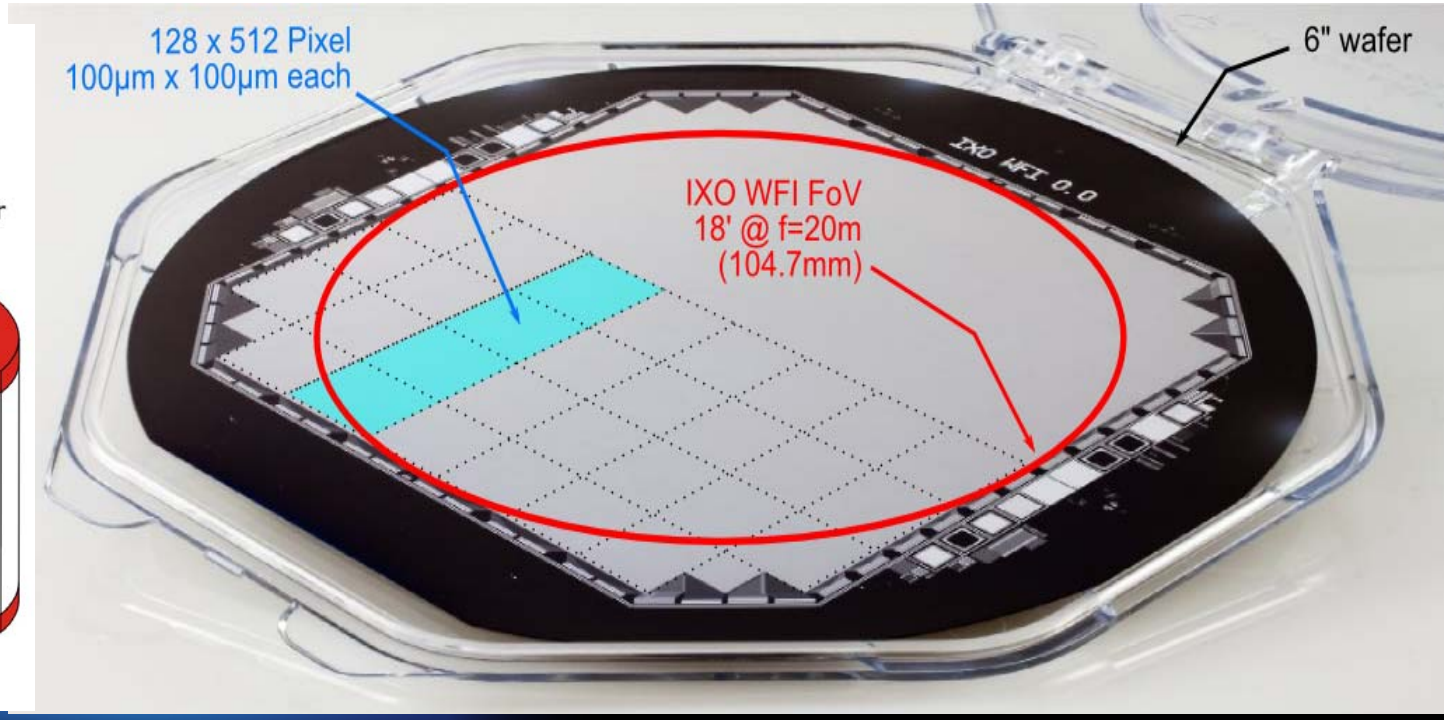

WFI – HXI Configuration

- **HXI mounted co-aligned with WFI (Simbol-X heritage)**
- **HXI <30 mm out of focus**
- **WFI: T=-60°C**
- **HXI: T=-40°C**

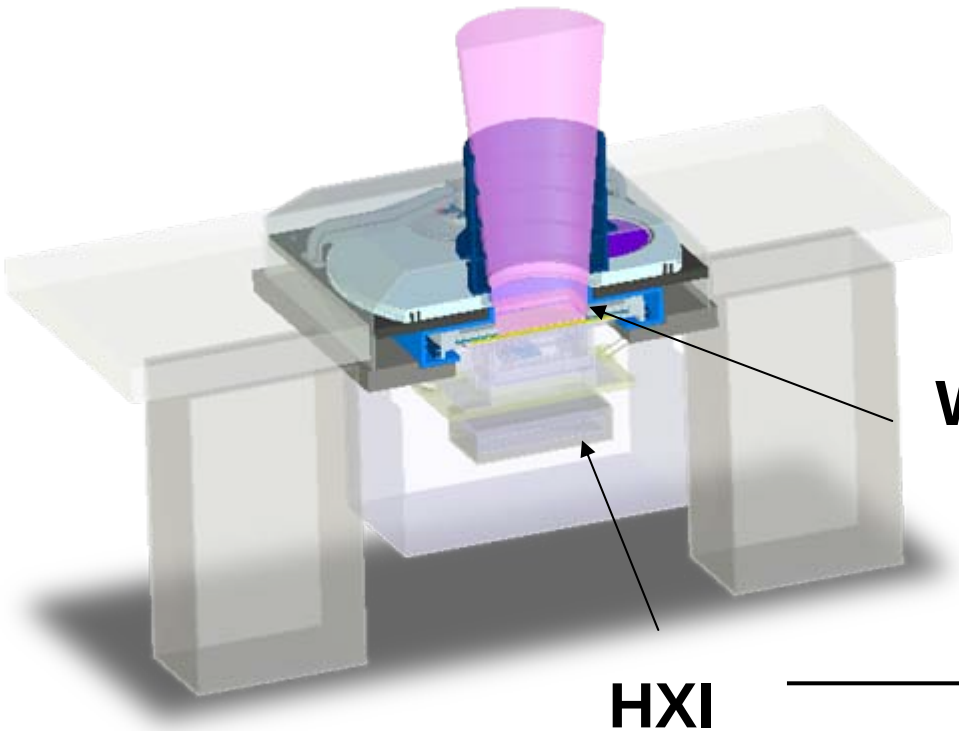

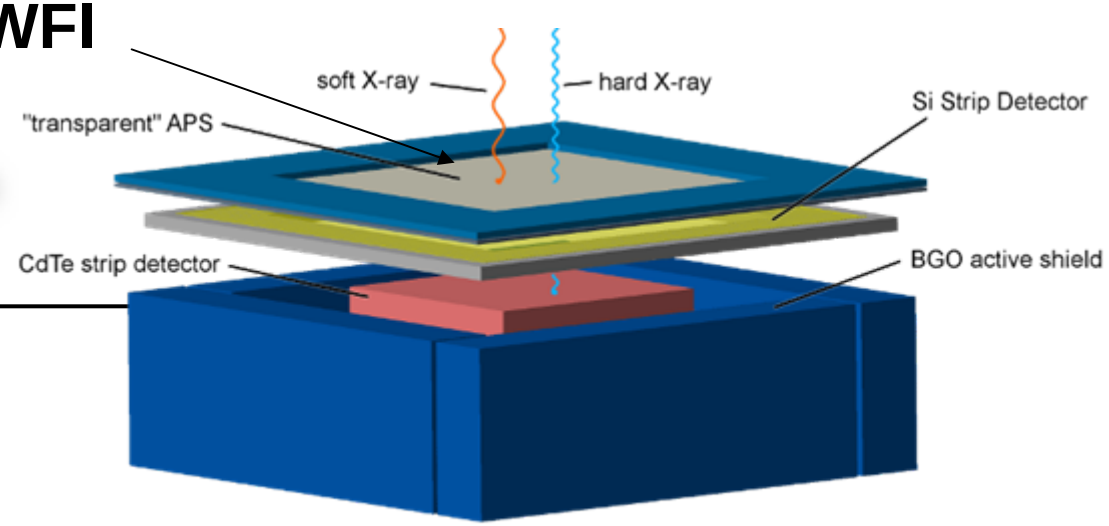

HXI Instrument Technology

E=10-40 keV
FoV 8'x8'

Si and CdTe strip detectors

- **5x5 cm**
- **ASTRO-H and Simbol-X heritage**
- **BGO shield technology with APD readout**

2x Double-sided Si Strip Detector

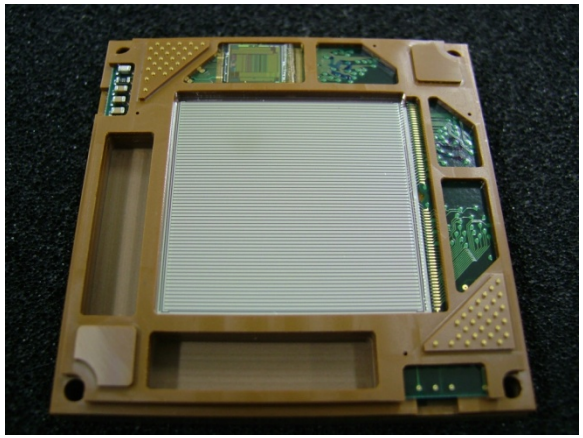

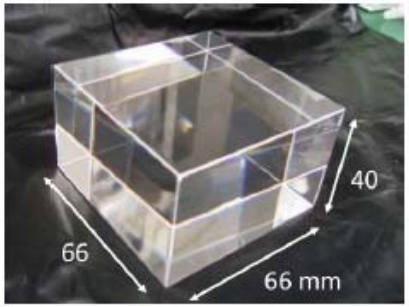

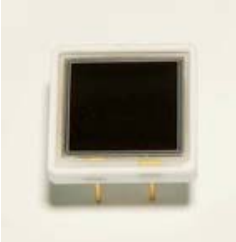

Double-sided Strip CdTe Detector

HTRS key technology

- **E=0.3-15 keV**
- **Count rate up to 2 Mcounts/s**

Silicon Drift Detectors (SDDs):

- **small capacitance and integrated FET:**
  ➔ high count rate and moderate spectroscopy applications
- **out of focus (~-12 cm) for uniform illumination over whole detector (24mm∅)**
- **31 detectors**
- **T =-40° C**

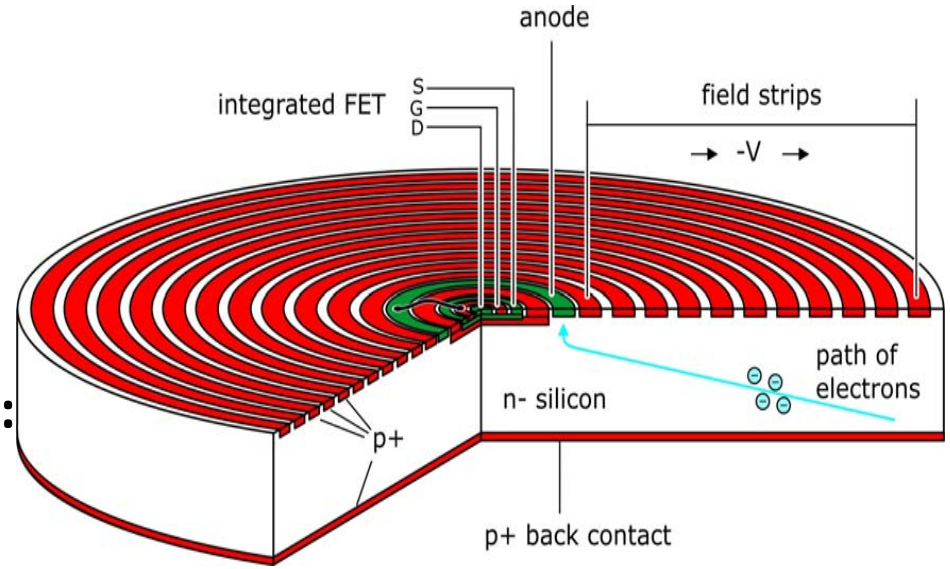

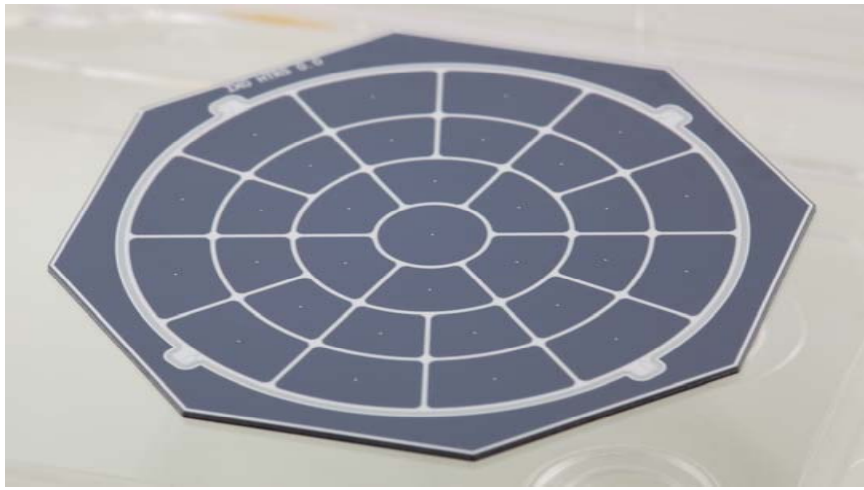

HTRS configuration

The focal plane assembly

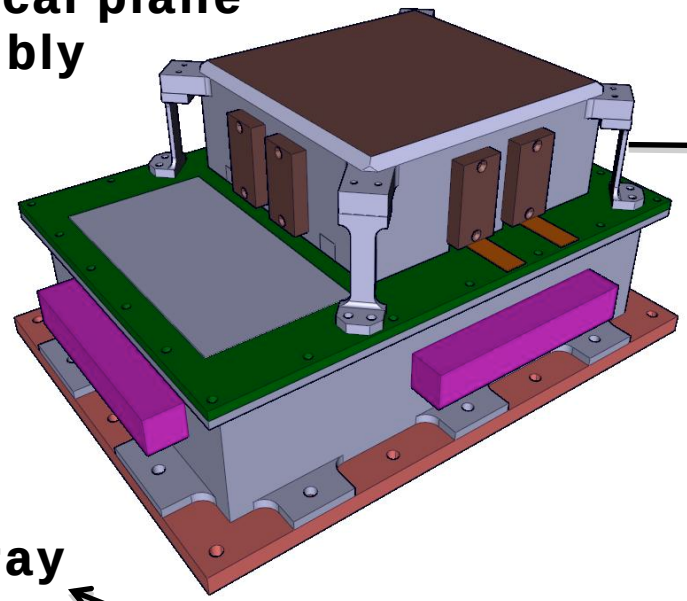

The detector unit

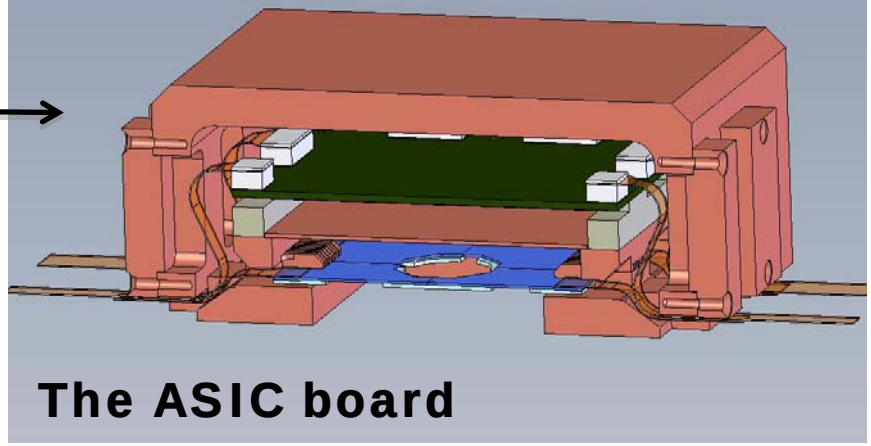

The ASIC board

SDD array

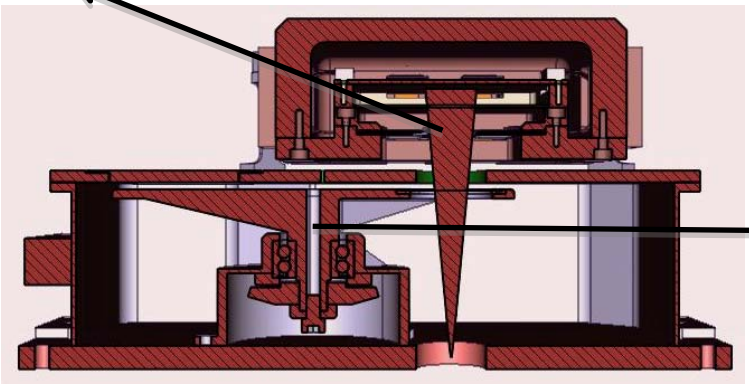

The filter wheel

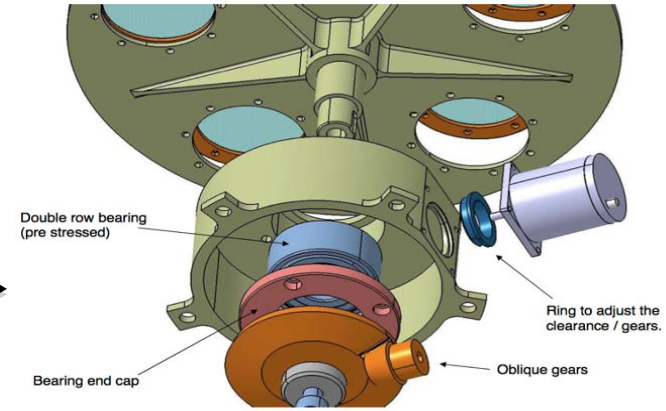

Courtesy Franck Cadoux & Stéphane Paltani

XPOL key technology

- **1% Min.Det. Pol. (3σ, 1mCrab, 10^5s)**
- **E=2-10 keV**

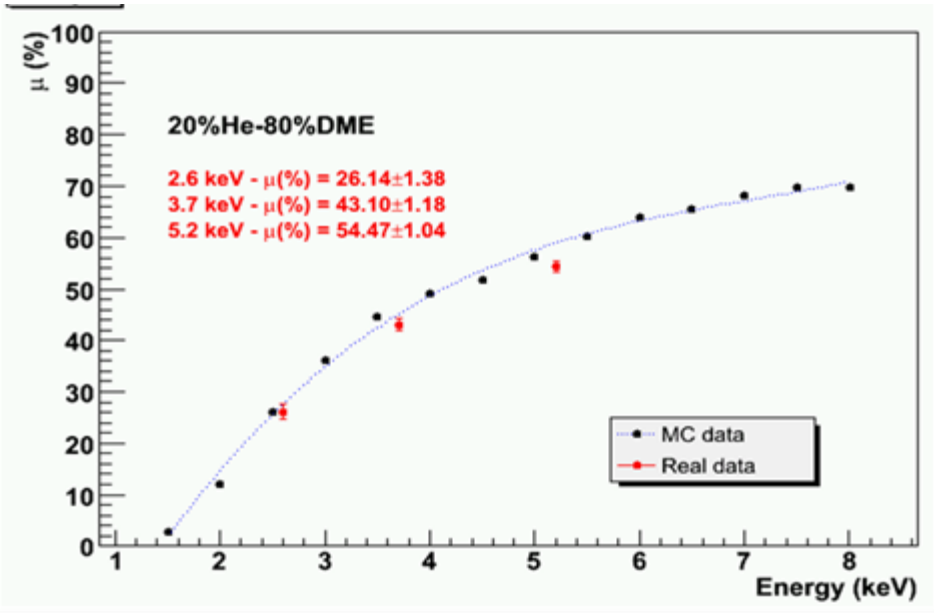

Gas pixel detector (GPD):

- **Polarization direction derived from photoelectron track in gas**
- **imaged by a finely subdivided anode**
- **15x15mm**
- **FoV = 2.6'∅**

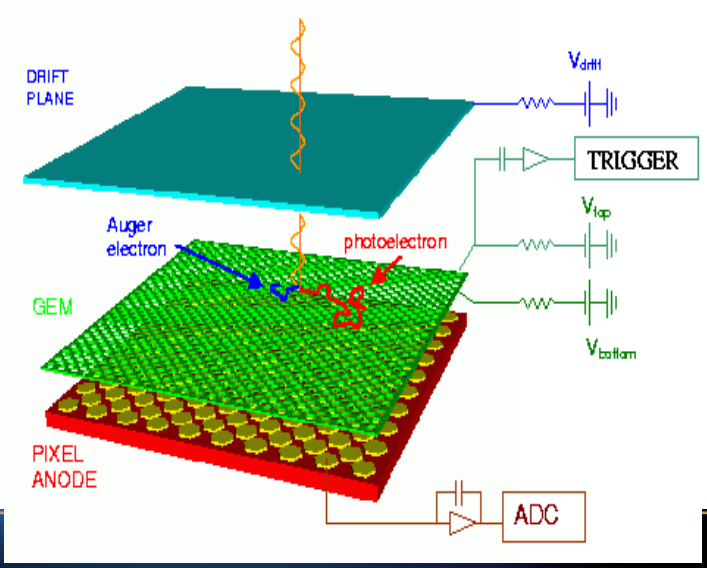

XPOL configuration

- **Focal Plane Assembly (FPA)**
  - GPD and Filter Wheel assembly (GPD+FW)
  - Back End Electronics unit (BEE)

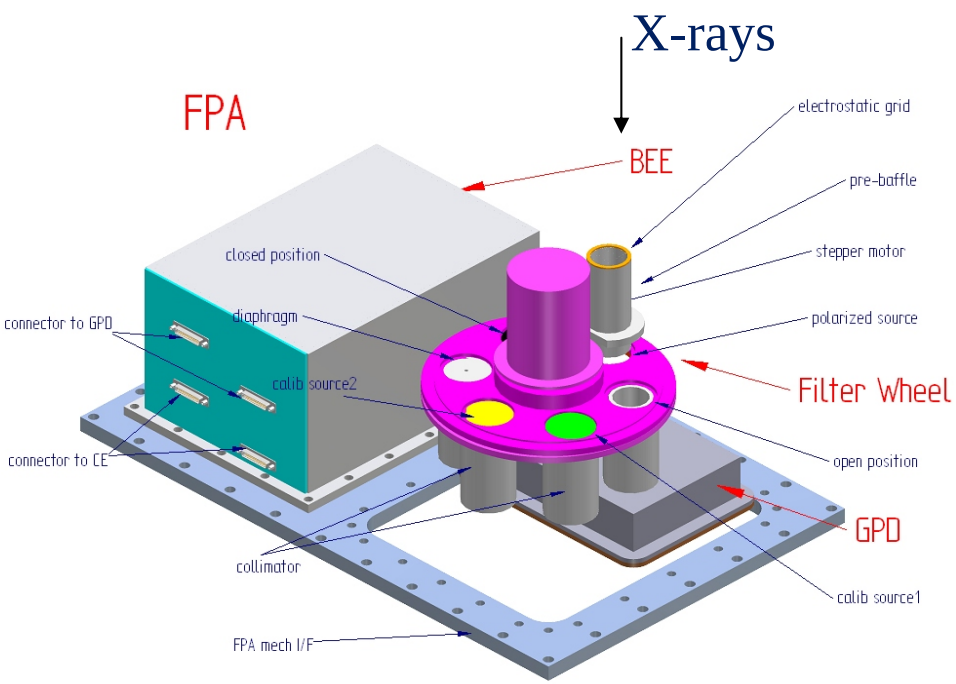

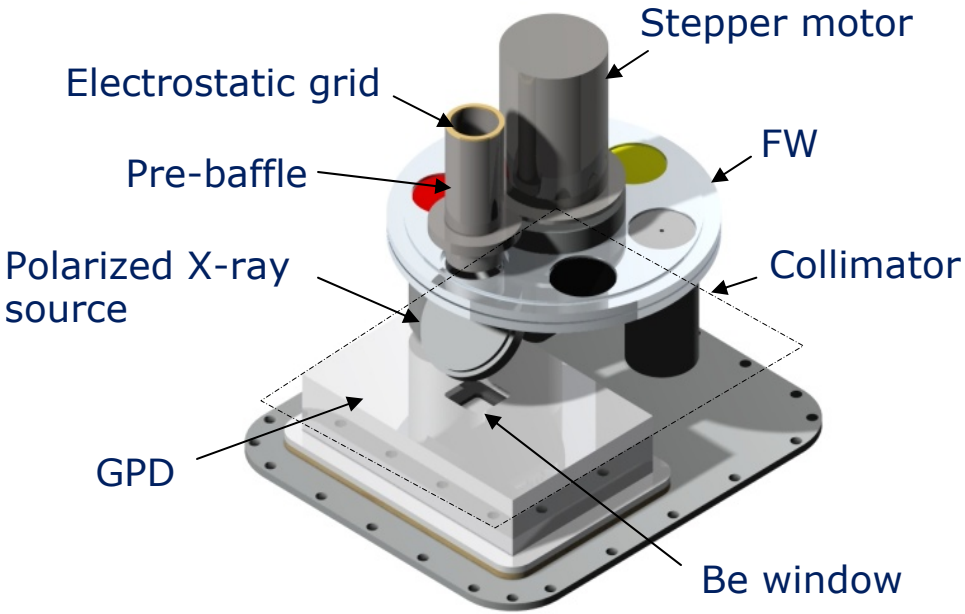

GPD+FW

Accommodation on S/C

Instrument Accommodation on S/C

- Instrument platform is on extendable bench, deployed after launch
- Single aperture mirror concept requires a movable platform to place the relevant on-axis instrument in focus, and a fixed platform for XGS
- Translation and focus adjustment
- Instrument platform requires metrology to measure its precise position wrt X-ray beam to:
  - Maintain image quality (5”)
  - Accurately reconstruct pointing (1”)
- Baffles for stray light (X-ray, UV/VIS) suppression
- Magnetic diverters for deflection of ‘focussed’ charged particle away from detectors (but respecting magnetic field reqs of the instruments)
- distance requirements for electronic boxes
- Temperature requirements for detectors + cryocooler for XMS

TAS Instrument platform concept

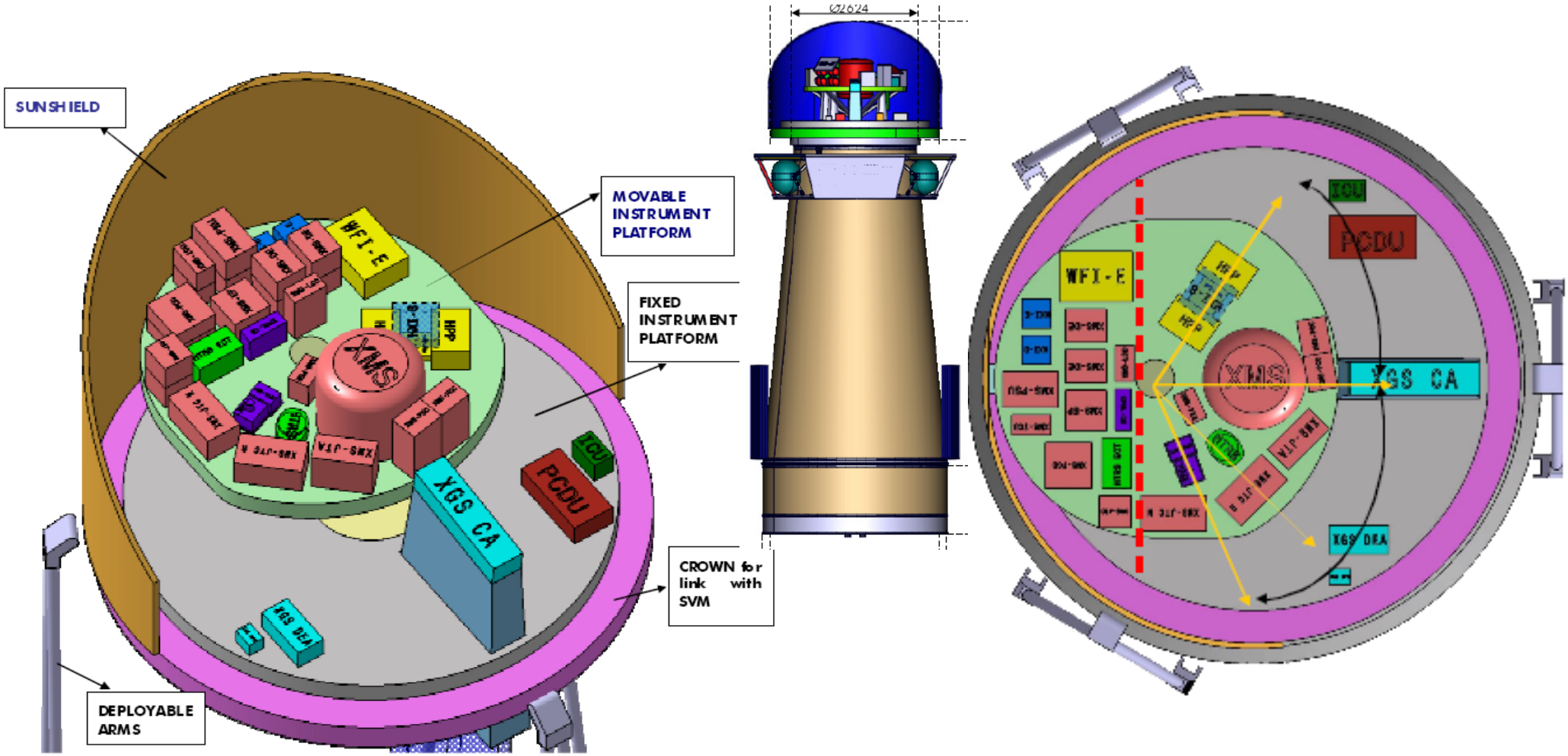

ASU Instrument platform concept

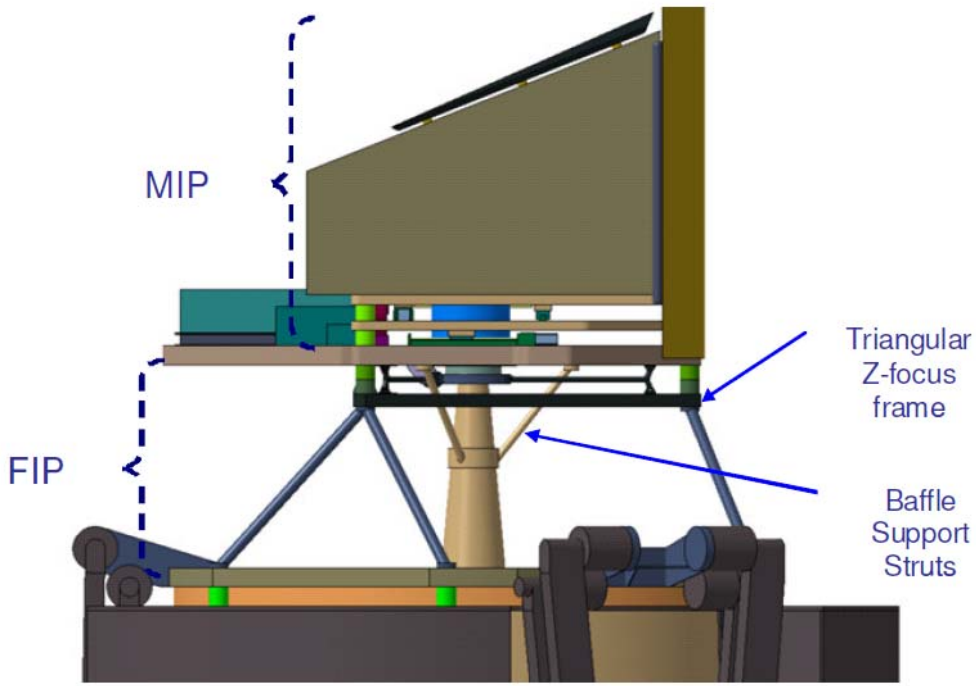

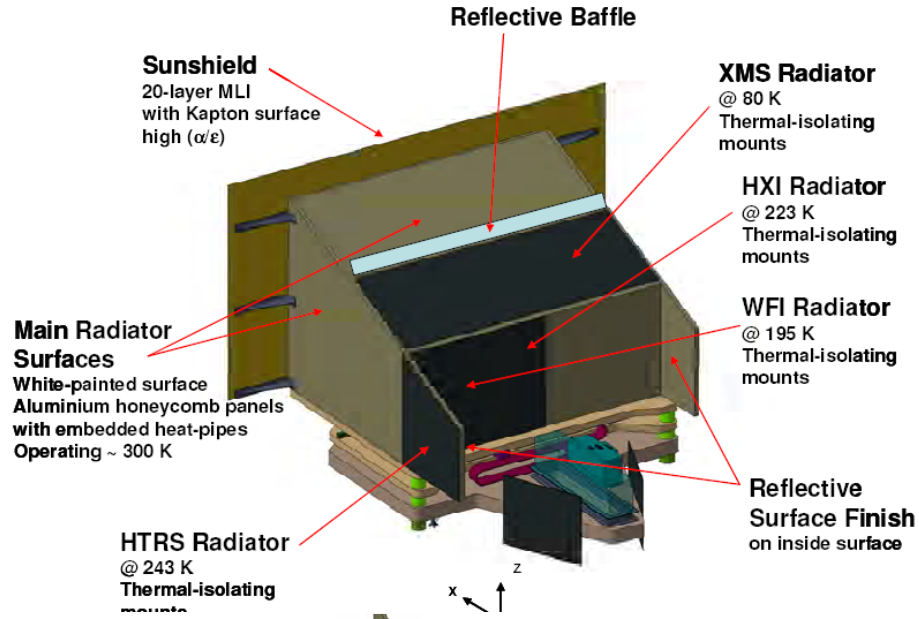

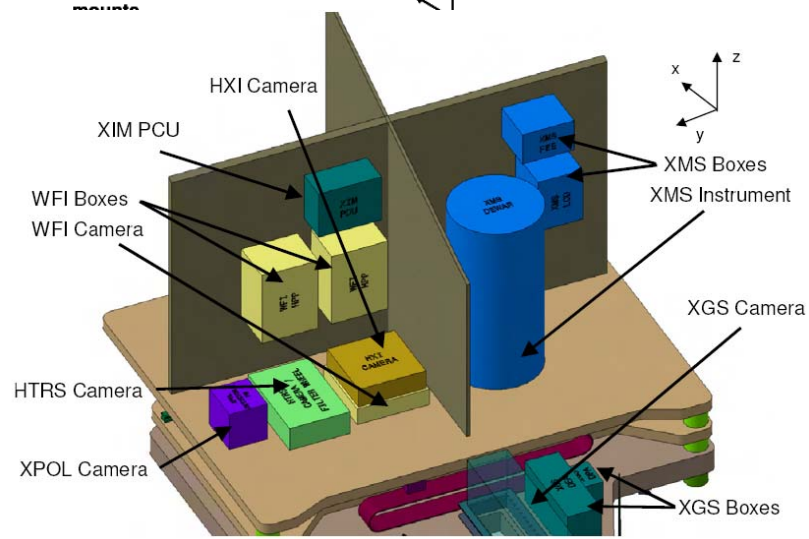

ASU cryochain concept for XMS

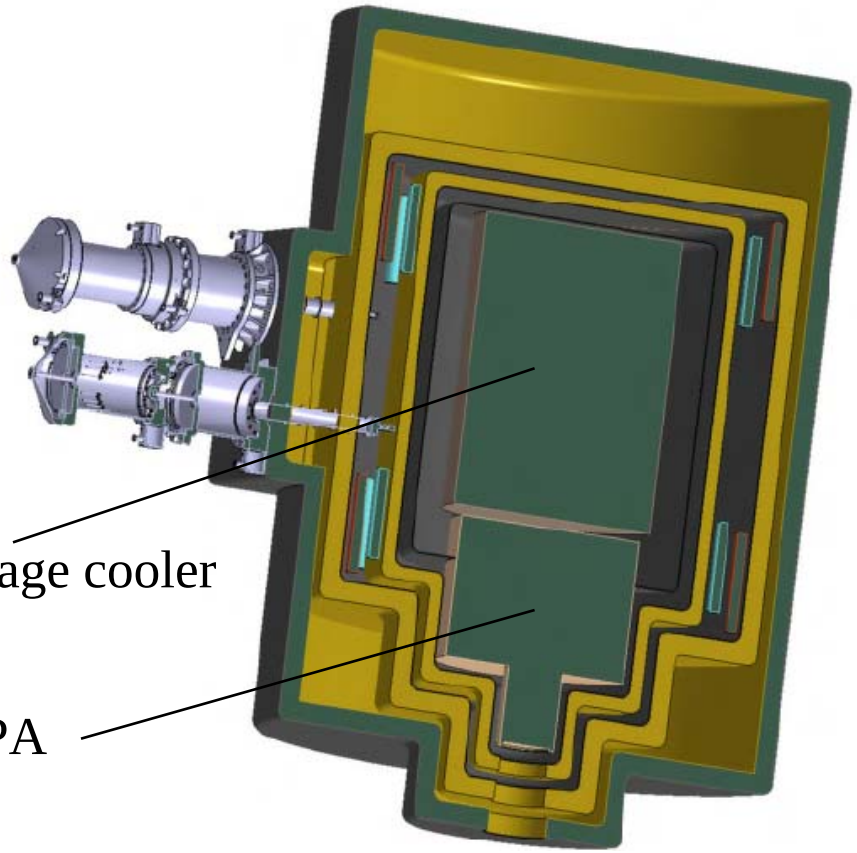

- Last stage cooler (45 mK):
  dADR or HSC/ADR

- 2K He3 J-T coolers (2x, warm red.)
- 10K Stirling coolers (3x, warm red.)
- 80 K radiator
- Cryostat at 300K

Resources:
- Mass: 297 kg
- Power:
  - operation: 767 W (worst case)
  - recycling: 1203W

TAS cryochain concept for XMS

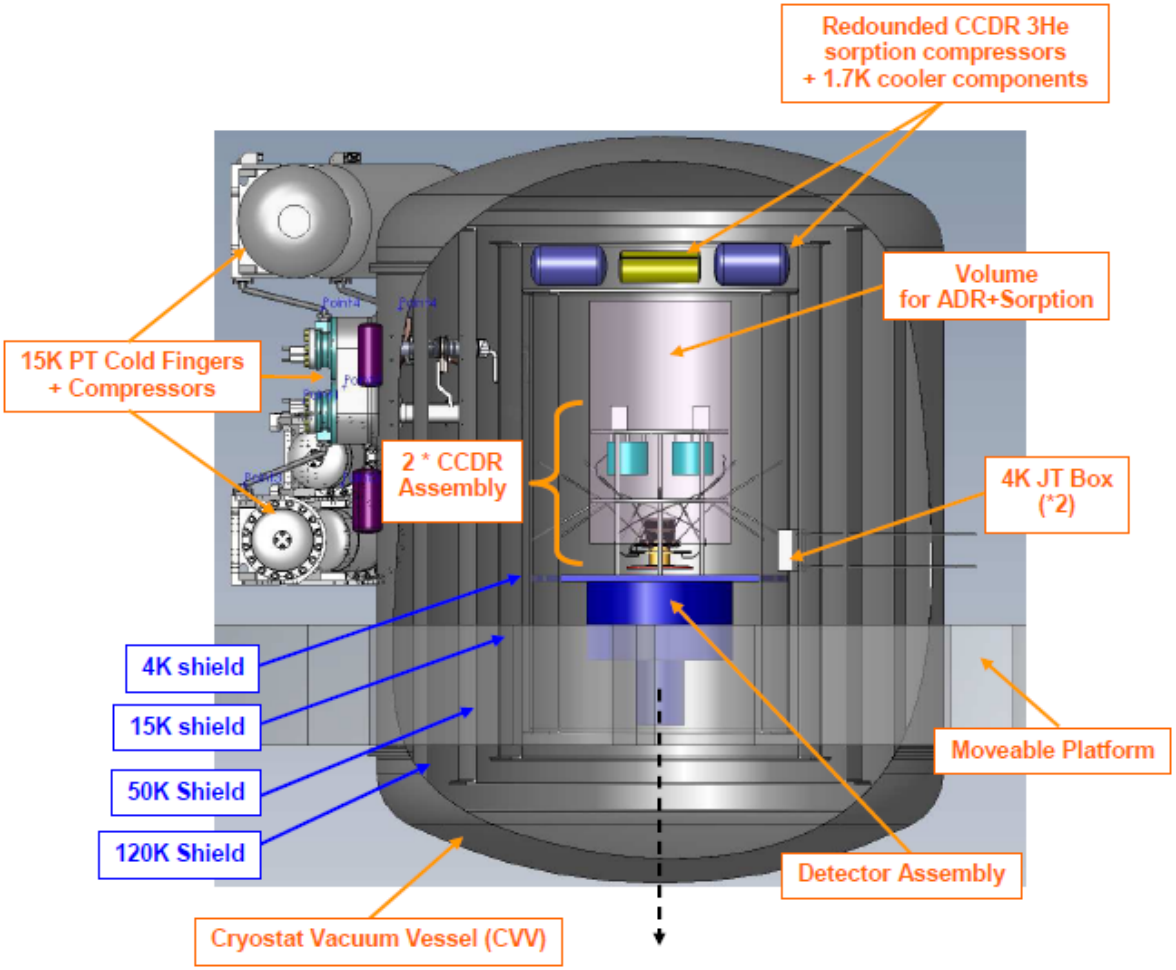

- Last stage cooler (45 mK): closed cycle dilution refrigerator (2x, cold red.)

- 4K He4 J-T coolers (2x, warm red.)
- 15K PT coolers (2x, warm red.)
- 50K PT coolers (3x, warm red.)
- Cryostat at 300K

Resources:
- Mass: 257 kg
- Power: 763 W
- dimensions: ∅70x92 cm

Accommodation issues

- **Mass, Mass, Mass**
- **Pointing/alignment (deployment, stability)**
- **Accommodation on MIP (space, thermal)**
- **Cryogenics for XMS**
- **Straylight (external, µ-meteorites, metrology system)**
- **Contamination**

Instrument Resources

instrument	acronym	Mass (kg)	Power (W)	Data rate (kbps)	
			peak	typical	Max
Wide Field Imager	WFI	101	283	45	450
Hard X-ray Imager	HXI	28	56	11	256
Cryogenic Spectrometer	XMS	113	534	64	840
	Cryo-chain	257/297	763/767	n/a	n/a
Grating Spectrometer	CAT-XGS	122	137	128	128 (1280)
	OP-XGS	91	86		750
High Time Resolution Spectrometer	HTRS	30	145	840	840
Polarimeter	X-POL	15	55	840	840
Total / Sizing case		666/704 kg	1823/1827 W XMS+XGS & WFI/HXI in cal	968 kbit/s XMS+XGS	